C5208

Vodicí pouzdro pro kuličkovou klec

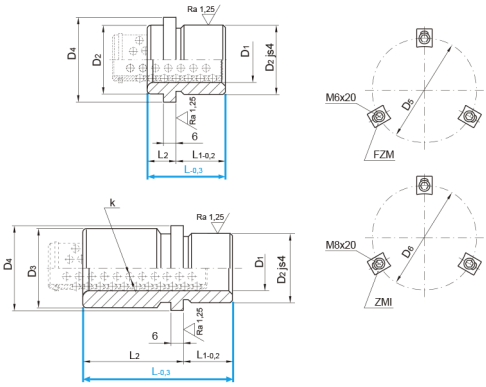

kód	D	L	L1	L2	D1	D2	D3	D4	D5	D6	k
C5208/20x35	20	35	23	12	26	32		40	52	54	3
C5208/20x43	20	43	23	20	26	32	39	40	52	54	3
C5208/20x59	20	59	23	36	26	32	39	40	52	54	3
C5208/25x35	25	35	23	12	31	40		48	60	62	3
C5208/25x59	25	59	23	36	31	40	46	48	60	62	3
C5208/25x79	25	79	23	56	31	40	46	48	60	62	3
C5208/32x42	32	42	30	12	40	48		56	67	70	4
C5208/32x75	32	75	30	45	40	48	53	56	67	70	4
C5208/32x93	32	93	30	63	40	48	53	56	67	70	4
C5208/40x52	40	52	37	15	48	58		66	77	80	4
C5208/40x82	40	82	37	45	48	58	63	66	77	80	4
C5208/40x108	40	108	37	71	48	58	63	66	77	80	4
C5208/50x65	50	65	47	18	58	70		80	91	94	4
C5208/50x97	50	97	47	50	58	70	77	80	91	94	4
C5208/50x127	50	127	47	80	58	70	77	80	91	94	4
C5208/63x80	63	80	60	20	73	85		95	106	109	5
C5208/63x116	63	116	60	56	73	85	92	95	106	109	5
C5208/63x150	63	150	60	90	73	85	92	95	106	109	5
C5208/80x80	80	80	60	20	92	105		118	129	132	6
C5208/80x120	80	120	60	60	92	105	115	118	129	132	6
C5208/80x150	80	150	60	90	92	105	115	118	129	132	6